Dart Aerospace Ltd.

13

Date: Thursday, 3/13/2008 10:17:00 AM
User: Kim Johnston

Process Sheet

Customer	: CU-DAR001 Dart Helicopters Services	Drawing Name	: FWD X-TUBE EXTENDED HEIGHT GEAR (-011)
Job Number	: 37906		
Estimate Number	: 10007		
P.O. Number	:	Part Number	: D205596101
This Issue	: 3/13/2008 S.O. No. :	Drawing Number	: D205-596-101
Prsht Rev.	: NC	Project Number	: N/A
First Issue	: / / Type : LANDING GEAR	Drawing Revision	: B
Previous Run	: 37905	Material	:
Written By	:	Due Date	: 3/27/2008 Qty: 1 Um: Each
Checked & Approved By	: 08 03 13		
Comment	: Est Rev G Removed Bending 05-10-25 JLM		
	Est Rev:H ECN 1075 08-01-10 DD		

Additional Product

Job Number:

Seq. #	Machine Or Operation:	Description :
1.0	DC	DOCUMENT CONTROL

Comment: DOCUMENT CONTROL
Photocopy D205-594 bluefile & type labels per PPP D205-596-101 CHG~~001~~ 002

2.0	D2889	FWD Crosstube

Comment: Qty.: 1.0000 Each(s)/Unit Total : 1.0000 Each(s)
FWD Crosstube
Pick:

Qty	Part number	Description	Batch
1	D2889	Fwd Crosstube	~~B38345~~ 38665

DP 8-8-12

3.0	BENDING	BENDING MACHINE

Comment: BENDING MACHINE
Bend as per Dwg D2889

DP 8-8-12

4.0	LANDING GEAR 1	LANDING GEAR RESOURCE 1

see attachment. mf 08-04-07

Comment: LANDING GEAR RESOURCE 1
Mark 31.53" for cutting from tangential line in the straight section from D2889 as per Dwg wall template.
Identify off-cuts with batch number & part number and bring them to cnc lathe

5.0	QC15	DIMENSIONAL CHECK OF X-TUBES

08 08 12

Comment: DIMENSIONAL CHECK OF X-TUBES

Form: process

Dart Aerospace Ltd

W/O:		WORK ORDER CHANGES					
DATE	STEP	PROCEDURE CHANGE	By	Date	Qty	Approval Chief Eng / Prod Mgr	Approval QC Inspector

Part No: _____ **PAR #:** _____ **Fault Category:** _____ **NCR:** Yes No **DQA:** _____ **Date:** _____

QA: N/C Closed: _____ **Date:** _____

NCR:		WORK ORDER NON-CONFORMANCE (NCR)						
DATE	STEP	Description of NC Section A	Corrective Action Section B			Verification Section C	Approval Chief Eng	Approval QC Inspector
			Initial Chief Eng	Action Description Chief Eng	Sign & Date			

NOTE: Date & initial all entries

Date: Thursday, 3/13/2008 10:17:00 AM
User: Kim Johnston

Process Sheet

Customer: CU-DAR001 Dart Helicopters Services **Drawing Name:** FWD X-TUBE EXTENDED HEIGHT GEAR (-011)

Job Number: 37906 **Part Number:** D205596101

Job Number:

Seq. #:	Machine Or Operation:	Description :
6.0	LANDING GEAR 1	LANDING GEAR RESOURCE 1

Comment: LANDING GEAR RESOURCE 1 see attachment 08-04-07

1-Cut as per Dwg D205-596-101

2-Deburr & Inspect for surface damage. Polish cut surface.Scribe part # and Batch # on one end of tube.

7.0	QC15	DIMENSIONAL CHECK OF X-TUBES

Comment: DIMENSIONAL CHECK OF X-TUBES 08/08/12

8.0	HAND FINISHING1	HAND FINISHING RESOURCE #1

Comment: HAND FINISHING RESOURCE #1
Chemical Conversion Coat per QSI 005 4.1

9.0	QC5	INSPECT WORK TO CURRENT STEP

Comment: INSPECT WORK TO CURRENT STEP 08/08/12

10.0	SPRAY PAINTING	SPRAY PAINTING

08 08 12

Comment: SPRAY PAINTING
Prime inside and outside with Immron per QSI 005 4.2

11.0	QC14	INSPECT SPRAY PAINT

Comment: Inspect Spray Paint 08-08-13

12.0	D3595063450	RUBBER CUSHION

Comment: Qty.: 4.0000 Each(s)/Unit Total : 4.0000 Each(s)
RUBBER CUSHION
batch 38500 08 08 13

13.0	MS2192025	Clamp(per MIL-DTL-8783C)

Comment: Qty.: 4.0000 Each(s)/Unit Total : 4.0000 Each(s)
Clamp(per MIL-DTL-8783C)
batch 108224 08 08 13

Form: process

Dart Aerospace Ltd

W/O:		WORK ORDER CHANGES					
DATE	STEP	PROCEDURE CHANGE	By	Date	Qty	Approval Chief Eng / Prod Mgr	Approval QC Inspector

Part No: _____ **PAR #:** _____ **Fault Category:** _____ **NCR:** Yes No **DQA:** _____ **Date:** _____

QA: N/C Closed: _____ **Date:** _____

NCR:		WORK ORDER NON-CONFORMANCE (NCR)						
DATE	STEP	Description of NC Section A	Corrective Action Section B			Verification Section C	Approval Chief Eng	Approval QC Inspector
			Initial Chief Eng	Action Description Chief Eng	Sign & Date			

NOTE: Date & initial all entries

Date: Thursday, 3/13/2008 10:17:00 AM
User: Kim Johnston

Process Sheet

Customer: CU-DAR001 Dart Helicopters Services **Drawing Name:** FWD X-TUBE EXTENDED HEIGHT GEAR (-011)

Job Number: 37906 **Part Number:** D205596101

Job Number:

Seq. #:	Machine Or Operation:	Description :
14.0	D28931	Support

Comment: Qty.: 2.0000 Each(s)/Unit Total : 2.0000 Each(s)
Support
Pick:
Qty Part number Description Batch
2 D2893-1 Support 38124 mf 08 08 13

15.0	LANDING GEAR 1	LANDING GEAR RESOURCE 1 mf 08-04-07

see attachment

Comment: LANDING GEAR RESOURCE 1
1- Apply magnobond 6398 as per dwg D205-596-101.
Magnobond 6398 Batch:_____

2-Install supports and clamps as per Dwg D205-596-101. Torque clamps to 80-100 in lb. as per dwg

16.0	QC5	INSPECT WORK TO CURRENT STEP 08-08-14 (1)

Comment: INSPECT WORK TO CURRENT STEP

17.0	QC4	INSPECT 100% KITS FOR COMPLETENESS N/A

Comment: INSPECT 100% KITS FOR COMPLETENESS

18.0	PACKAGING 1	PACKAGING RESOURCE #1

Comment: PACKAGING RESOURCE #1
Identify and pack for shipping as per PPP D205-596-101
Location: F 8/8/14 SP

19.0	QC21	FINAL INSPECTION/W/O RELEASE

Comment: FINAL INSPECTION/W/O RELEASE (1) 08/08/14
mf 08-08-14

Job Completion

37906 D205-596-101

Form: rprocess

Dart Aerospace Ltd

W/O:		WORK ORDER CHANGES					
DATE	STEP	PROCEDURE CHANGE	By	Date	Qty	Approval Chief Eng / Prod Mgr	Approval QC Inspector
08-08-14	17.0	What Kit??? Qc 4 not necessary, no kit to inspect. Remove perm. change				08-08-14	08-08-14

Part No: _____ PAR #: _____ Fault Category: _____ NCR: Yes No DQA: _____ Date: _____

QA: N/C Closed: _____ Date: _____

NCR:		WORK ORDER NON-CONFORMANCE (NCR)						
DATE	STEP	Description of NC Section A	Corrective Action Section B			Verification Section C	Approval Chief Eng	Approval QC Inspector
			Initial Chief Eng	Action Description Chief Eng	Sign & Date			

NOTE: Date & initial all entries

DART AEROSPACE LTD	Work Order:	37903
Description: Crosstube High-High Fwd	Part Number:	D205-596-101
Inspection Dwg: D205-596-101 Rev: ~~A~~ B 08.03.19		Page 1 of 1

Required Dimension	Min	Max
Height	38.2	38.4
1/2 Span	59.5	59.7
Angle	49	52
Total Span	119.0	119.4

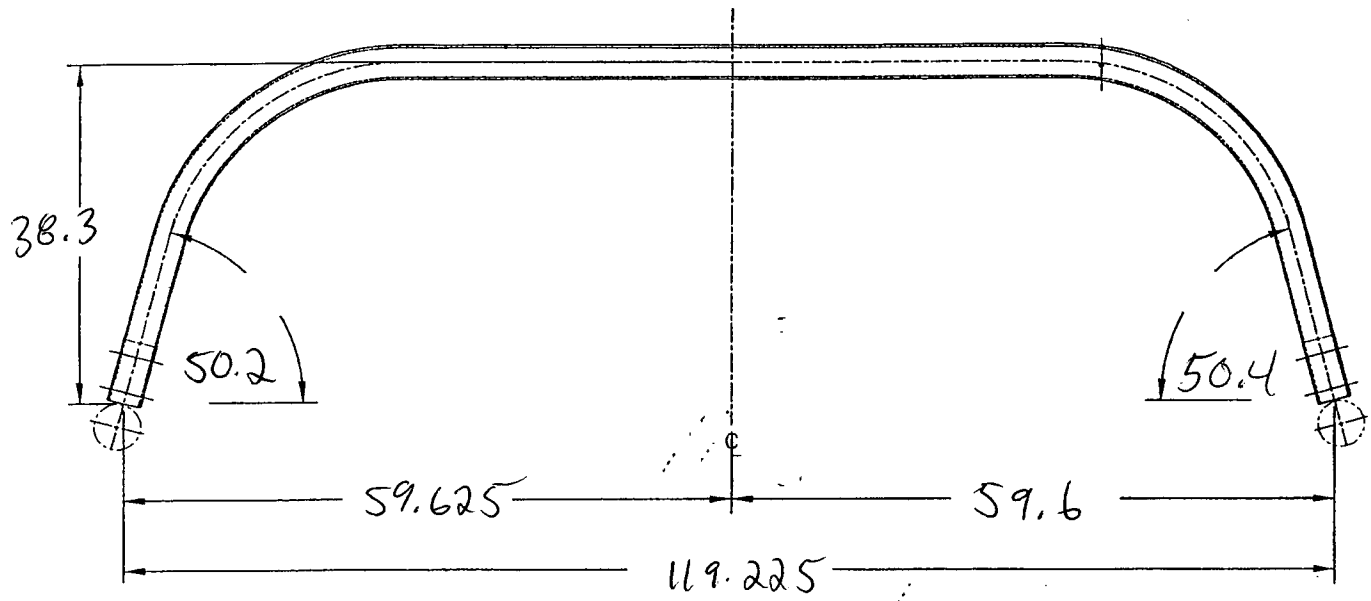

Comments

QC15 Inspection	
Date	08-06-12

Rev	Date	Change	Revised by	Approved
A	07.02.06	New Issue	KJ/JM	

PARTS LIST:

Qty	Part Number	Description
X	D205-596-101	CROSSTUBE ASSEMBLY, HI-HI FWD
1	D6005-180	CROSSTUBE
2	D2893-1	SUPPORT
4	D3595-063-450	RUBBER CUSHION
4	MS21920-25	CLAMP
A/R	MAGNOBOND 6398	ROCKWELL SPECIFICATION RBO-120-023 ADHESIVE (TEXTRON/BELL SPEC. 299-947-100, TYPE II, CLASS 2 ADHESIVE)

GENERAL NOTES:

1) MATERIAL: MANUFACTURE FROM D6005-180
   FINISHED LENGTH = 149.60 ± 0.02
2) FINISH: CHEMICAL CONVERSION COAT PER DART QSI 005 4.1
   PRIME INSIDE AND OUTSIDE PER DART QSI 005 4.2
   PAINT OUTSIDE PER DART 005 4.2
3) TOLERANCES: PER DART QSI 018 UNLESS OTHERWISE NOTED
4) UNITS: INCHES UNLESS OTHERWISE NOTED
5) BREAK SHARP EDGES: N/A
6) IDENTIFICATION: SCRIBE DART PART NUMBER AND BATCH NUMBER IN THIS AREA WITH VIBRATING STYLUS
7) WEIGHT: 44 lbs
8) PART IS SYMMETRIC ABOUT CENTERLINE
9) BEND PROGRESSIVELY WITH A MINIMUM OF 3 PASSES. MAXIMUM TUBE FLATTENING DUE TO BENDING IS 6% BASED ON O.D.
10) EXTREME CARE MUST BE TAKEN TO PROTECT THE OUTSIDE SURFACE OF THE TUBE. THE OUTSIDE SURFACE MUST BE SMOOTH AND FREE FROM SURFACE DEFECTS SUCH AS SCRATCHES, NICKS, OR DENTS. DEFECTS UP TO 0.005" MAY BE BLENDED OUT LONGITUDINALLY. CIRCUMFERENTIAL GRIND MARKS ARE UNACCEPTABLE.
11) APPLY A 0.03" TO 0.06" THICK LAYER OF MAGNOBOND 6398 TO THE SURFACE OF D2893-1 THAT WILL BE IN CONTACT WITH THE CROSSTUBE. LET CURE FOR 12 HOURS AFTER INSTALLATION AND PRIOR TO PACKAGING.
12) INSTALL MS21920-25 CLAMPS WITH D3595-063-450 RUBBER CUSHIONS TO SECURE D2893-1 SUPPORT ON THE TOP SIDE OF THE CROSSTUBE. ENSURE CLAMPS ARE OPPOSITE CROSSTUBE SUPPORT.
    NOTE: IT IS ACCEPTABLE TO SUBSTITUTE MS21920-25 CLAMPS WITH LONGER (MS21920-26) OR SHORTER (MS21920-24) CLAMPS TO ACCOMODATE VARYING DIAMETERS. ENSURE THERE IS A MINIMUM OF 1.5 THREADS IN SAFETY ON THE NUTS.
13) TORQUE CLAMPS 80 TO 100 IN-LB

SHOP COPY
RETURN TO
ENGINEERING
UNCONTROLLED COPY
SUBJECT TO AMENDMENT
WITHOUT NOTICE
RELEASED 02.01.16
WORK ORDER
NO. 37906

REV.	DESCRIPTION	BY	DATE
B	SUPPORT NOW MAGNOBONDED; REMOVE D2856-600-851 ABRASION STRIP; UPDATED NOTES; ADDED D3595-063-450 CUSHION; MS21920-25 WAS MS21920-24	MB	07.12.03
A	NEW ISSUE	DS	02.05.27

DESIGN		DART AEROSPACE LTD HAWKESBURY, ONTARIO, CANADA	
DRAWN			
CHECKED	PH	DRAWING NO.	REV. B
MFG. APPR.		D205-596-101	SHEET 1 OF 2
APPROVED		TITLE	SCALE
DE APPR.		CROSSTUBE ASSEMBLY, HI-HI FWD	NTS
DATE	07.12.03		

COPYRIGHT © 2002 BY DART AEROSPACE LTD
THIS DOCUMENT IS PRIVATE AND CONFIDENTIAL AND IS SUPPLIED ON THE EXPRESS CONDITION THAT IT IS NOT TO BE USED FOR ANY PURPOSE OR COPIED OR COMMUNICATED TO ANY OTHER PERSON WITHOUT WRITTEN PERMISSION FROM DART AEROSPACE LTD.

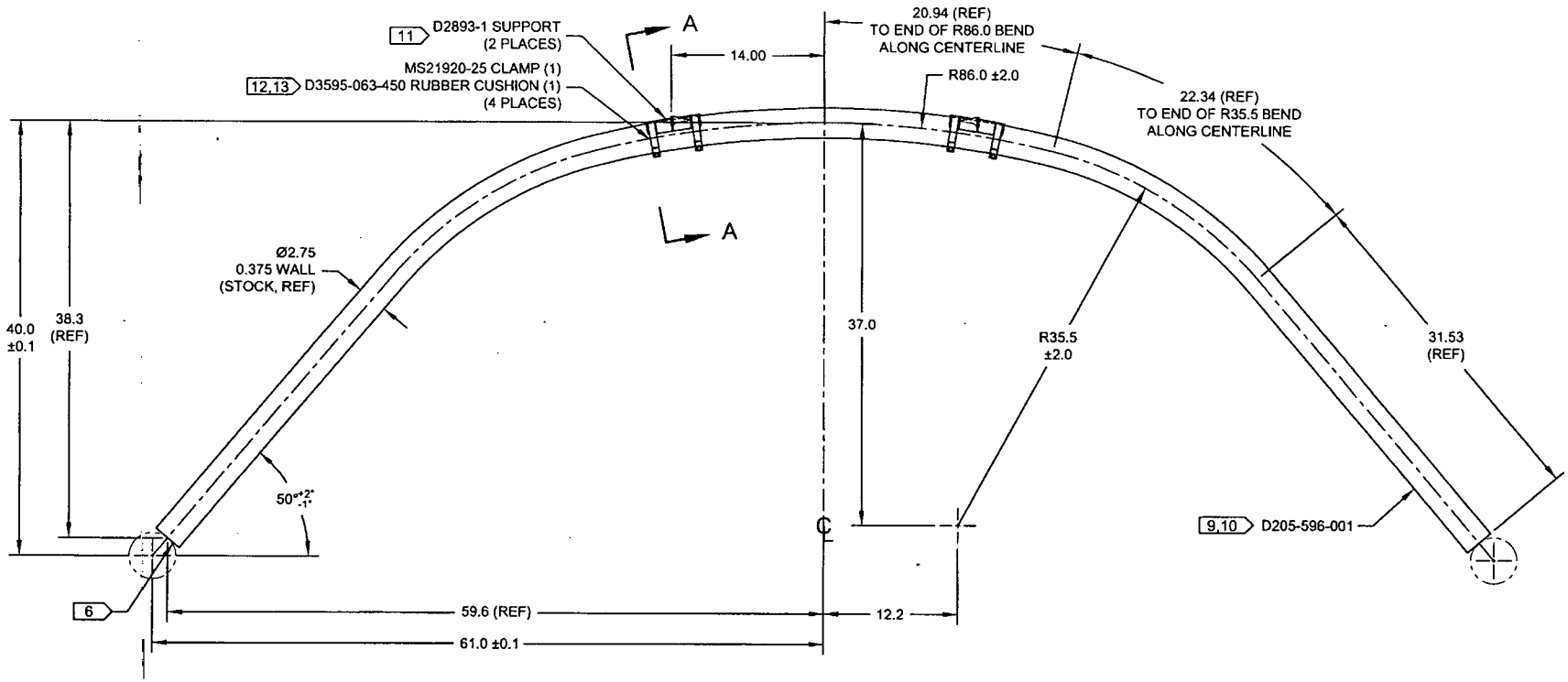

D205-596-101 CROSSTUBE ASSEMBLY, HI-HI FWD

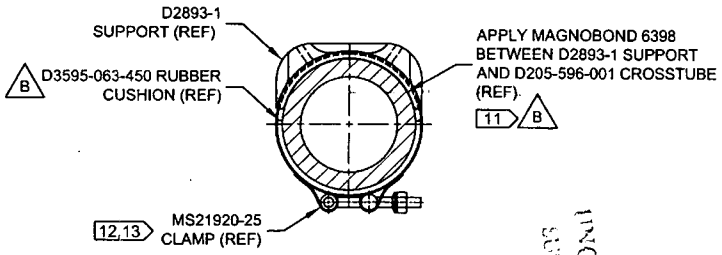

SECTION A-A
SCALE 2:5

SHOP COPY
RETURN TO
ENGINEERING
UNCONTROLLED COPY
SUBMIT TO ATTACHMENT
WITHOUT NOTICE
WORK ORDER
NO. 37906

DESIGN		**DART AEROSPACE LTD** HAWKESBURY, ONTARIO, CANADA
DRAWN		
CHECKED		DRAWING NO. REV. B
MFG. APPR.		D205-596-101 SHEET 2 OF 2
APPROVED		TITLE SCALE
DE APPR.		CROSSTUBE ASSEMBLY, HI-HI FWD 1:10
DATE 07.12.03		

COPYRIGHT © 2002 BY DART AEROSPACE LTD
THIS DOCUMENT IS PRIVATE AND CONFIDENTIAL AND IS SUPPLIED ON THE EXPRESS CONDITION THAT IT IS NOT TO BE USED FOR ANY PURPOSE OR COPIED OR COMMUNICATED TO ANY OTHER PERSON WITHOUT WRITTEN PERMISSION FROM DART AEROSPACE LTD.

Date: Friday, 04/04/2008 12:30:46 PM
User: Melanie Fauteux

Process Sheet

Customer	: CU-DAR001 Dart Helicopters Services	**Drawing Name**	: FWD X-TUBE EXTENDED HEIGHT GEAR (-011)
Job Number	: 37906		
Estimate Number	: 10007		
P.O. Number	:	**Part Number**	: D205596101
This Issue	: 04/04/2008 **S.O. No.** :	**Drawing Number**	: D205-596-101
Prsht Rev.	: NC	**Project Number**	: N/A
First Issue	: 13/03/2008 **Type** : LANDING GEAR	**Drawing Revision**	: B
Previous Run	: 37905	**Material**	:
Written By	:	**Due Date**	: 27/03/2008 **Qty:** 1 **Um:** Each
Checked & Approved By	:		
Comment	: Est Rev G Removed Bending 05-10-25 JLM		
	Est Rev:H ECN 1075 08-01-10 DD		

Additional Product

REFERENCE ONLY

Job Number: cmf

Seq. #:	Machine Or Operation:	Description :
4.0	CROSSTUBES	CROSSTUBES RESOURCE 1

DP 8-8-12

Comment: LANDING GEAR RESOURCE 1

Mark 31.53" for cutting from tangential line in the straight section from D2889 as per Dwg wall template.

Identify off-cuts with batch number & part number and bring them to cnc lathe — AWM 8-8-12

Job Completion

Date: Friday, 04/04/2008 12:31:10 PM
User: Melanie Fauteux

Process Sheet

Customer : CU-DAR001 Dart Helicopters Services
Job Number : 37906
Estimate Number : 10007
P.O. Number :
This Issue : 04/04/2008 **S.O. No.** :
Prsht Rev. : NC
First Issue : 13/03/2008 **Type** : LANDING GEAR
Previous Run : 37905
Written By :
Checked & Approved By :
Comment : Est Rev G Removed Bending 05-10-25 JLM
Est Rev:H ECN 1075 08-01-10 DD

Drawing Name : FWD X-TUBE EXTENDED HEIGHT GEAR (-011)
Part Number : D205596101
Drawing Number : D205-596-101
Project Number : N/A
Drawing Revision : B
Material :
Due Date : 27/03/2008 **Qty:** 1 **Um:** Each

Additional Product

REFERENCE ONLY

Job Number:

Seq. #:	Machine Or Operation:	Description :
6.0	CROSSTUBES	CROSSTUBES RESOURCE 1

Comment: LANDING GEAR RESOURCE 1

1-Cut as per Dwg D205-596-101

2-Deburr & Inspect for surface damage. Polish cut surface.Scribe part # and end of tube. Batch # on one

Job Completion

Date: Friday, 04/04/2008 12:31:28 PM
User: Melanie Fauteux

Process Sheet

Customer : CU-DAR001 Dart Helicopters Services
Job Number : 37906
Estimate Number : 10007
P.O. Number :
This Issue : 04/04/2008 **S.O. No.** :
Prsht Rev. : NC
First Issue : 13/03/2008 **Type** : LANDING GEAR
Previous Run : 37905
Written By :
Checked & Approved By :
Comment : Est Rev G Removed Bending 05-10-25 JLM
Est Rev:H ECN 1075 08-01-10 DD

Drawing Name : FWD X-TUBE EXTENDED HEIGHT GEAR (-011)
Part Number : D205596101
Drawing Number : D205-596-101
Project Number : N/A
Drawing Revision : B
Material :
Due Date : 27/03/2008 **Qty:** 1 **Um:** Each

Additional Product

REFERENCE ONLY

Job Number: ml

Seq. #:	Machine Or Operation:	Description :
15.0	CROSSTUBES	CROSSTUBES RESOURCE 1

Comment: LANDING GEAR RESOURCE 1

1- Apply magnobond 6398 as per dwg D205-596-101.
Magnobond 6398 Batch: 107621
exp: 08/2009 Time: 8:40am
ml 080813 (1)

2-Install supports and clamps as per Dwg D205-596-101. Torque clamps to 80-100 in lb. as per dwg

Job Completion

Form: rprocess

13

Date: Thursday, 3/13/2008 10:17:00 AM
User: Kim Johnston

Process Sheet

Customer	: CU-DAR001 Dart Helicopters Services	Drawing Name	: FWD X-TUBE EXTENDED HEIGHT GEAR (-011)
Job Number	: 37906		
Estimate Number	: 10007		
P.O. Number	:	Part Number	: D205596101
This Issue	: 3/13/2008 S.O. No. :	Drawing Number	: D205-596-101
Prsht Rev.	: NC	Project Number	: N/A
First Issue	: / / Type : LANDING GEAR	Drawing Revision	: B
Previous Run	: 37905	Material	:
Written By	:	Due Date	: 3/27/2008 Qty: 1 Um: Each
Checked & Approved By	: 08 03 13		
Comment	: Est Rev G Removed Bending 05-10-25 JLM		
	Est Rev:H ECN 1075 08-01-10 DD		

Additional Product

Job Number:

Seq. #	Machine Or Operation:	Description :
1.0	DC	DOCUMENT CONTROL

Comment: DOCUMENT CONTROL
Photocopy D205-594 bluefile & type labels per PPP D205-596-101 CH~~001~~002 08 03 14

2.0	D2889	FWD Crosstube

Comment: Qty.: 1.0000 Each(s)/Unit Total : 1.0000 Each(s)
FWD Crosstube
Pick:

Qty	Part number	Description	Batch
1	D2889	Fwd Crosstube	_____

3.0	BENDING	BENDING MACHINE

Comment: BENDING MACHINE
Bend as per Dwg D2889

REFERENCE ONLY

4.0	LANDING GEAR 1	LANDING GEAR RESOURCE 1

Comment: LANDING GEAR RESOURCE 1
Mark 31.53" for cutting from tangential line in the straight section from D2889 as per Dwg wall template.
Identify off-cuts with batch number & part number and bring them to cnc lathe

5.0	QC15	DIMENSIONAL CHECK OF X-TUBES

Comment: DIMENSIONAL CHECK OF X-TUBES

Form: rprocess